POWER TILT AND POWER TELESCOPIC STEERING COLUMN

SR0T1–01

COMPONENTS

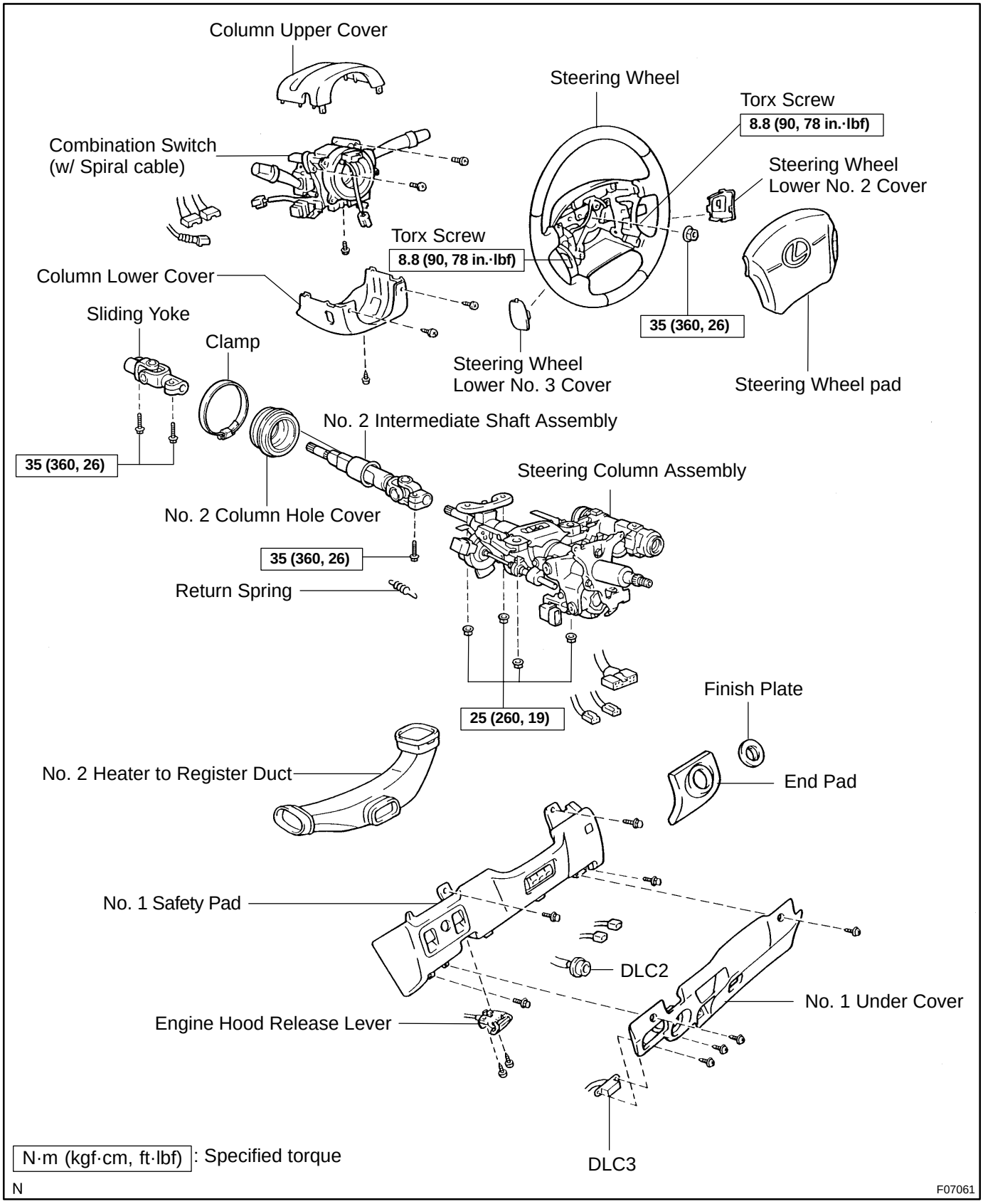

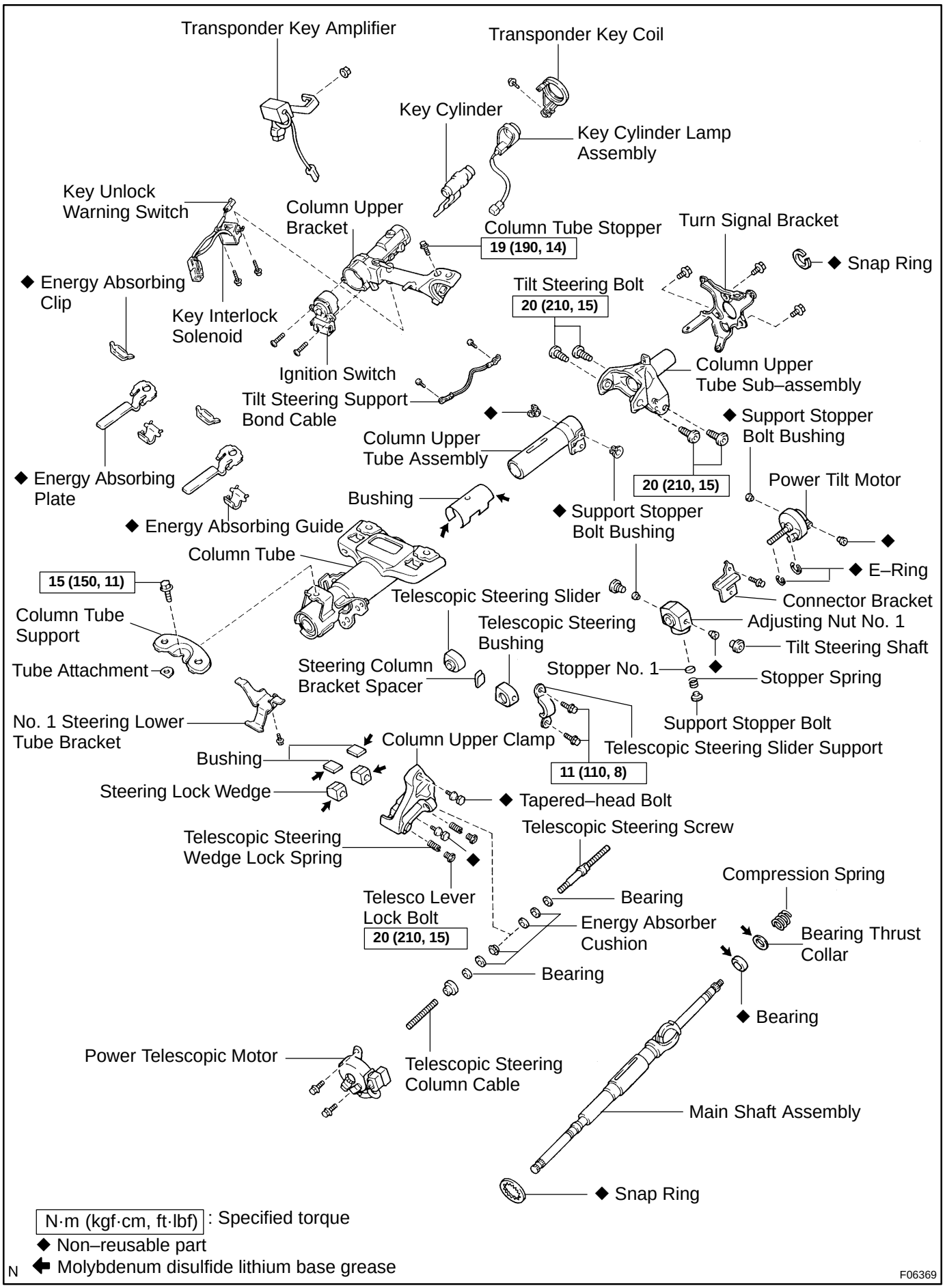
Transponder Key Amplifier
Transponder Key Coil
Key Cylinder
Key Cylinder Lamp Assembly
Key Unlock Warning Switch
Column Upper Bracket
Column Tube Stopper
19 (190, 14)
Turn Signal Bracket
◆ Snap Ring
◆ Energy Absorbing Clip
Key Interlock Solenoid
Tilt Steering Bolt
20 (210, 15)
Ignition Switch
Column Upper Tube Sub–assembly
Tilt Steering Support Bond Cable
◆ Support Stopper Bolt Bushing
Column Upper Tube Assembly
◆ Energy Absorbing Plate
20 (210, 15)
Power Tilt Motor
Bushing
◆ Support Stopper Bolt Bushing
◆ Energy Absorbing Guide
Column Tube
◆ E–Ring
15 (150, 11)
Telescopic Steering Slider
Connector Bracket
Column Tube Support
Telescopic Steering Bushing
Adjusting Nut No. 1
Tilt Steering Shaft
Tube Attachment
Steering Column Bracket Spacer
Stopper No. 1
Stopper Spring
No. 1 Steering Lower Tube Bracket
Support Stopper Bolt
Column Upper Clamp
Telescopic Steering Slider Support
Bushing
11 (110, 8)
Steering Lock Wedge
◆ Tapered–head Bolt
Telescopic Steering Screw
Telescopic Steering Wedge Lock Spring
Compression Spring
Telesco Lever Lock Bolt
20 (210, 15)
Bearing
Energy Absorber Cushion
Bearing Thrust Collar
Bearing
◆ Bearing
Power Telescopic Motor
Telescopic Steering Column Cable
Main Shaft Assembly
◆ Snap Ring
N·m (kgf·cm, ft·lbf) : Specified torque
◆ Non–reusable part
N ⬅ Molybdenum disulfide lithium base grease
F06369